www.cjhunter.com
a product of ContractJobHunter.com LLC

Contract Employment
WEEKLY®

NATIONAL
NESC STAFFING

NESC Staffing

www.nesc.com 800-562-3463

New Openings

Solar Electrical Engineers
Virtual

Duties: Functions as a technical specialist or in a lead role. Under general direction, develops and applies advanced engineering techniques, concepts and approaches to complex engineering problems. May provide technical guidance over a group or supervise engineering staff on projects of low to medium complexity. May be responsible for developing, validating, and presenting specialist/technical output.
Engineering Standards: Provides guidance and direction on department design guides, standards, systems, applicable engineering codes and company policies. Assists in developing, maintaining and updating engineering standards. Provides technical guidance to others regarding projects and disciplines.

Due to government contracts, applicants must be a citizen of the United States.

Apply for these jobs or find new openings in aerospace, biotechnology, engineering, and more at www.nesc.com.
Please email your resume to Lary O'Keefe at lokeefe@nesc.com or apply online at **www.NESC.com.**

BBB ACCREDITED BUSINESS

FIRST-CLASS MAIL

published by: ContractJobHunter.com LLC, P.O. Box 3006, Bothell, WA 98041-3006
Phone: 425/806-5200 • *Email:* staff@cjhunter.com
NOVEMBER 24, 2021 • VOLUME 53, NO. 39 • $4.00

NATIONAL®
NESC STAFFING, CORP.

ACCREDITED BUSINESS

NESC STAFFING: Build a better career. Start here.

NOW HIRING

Aerospace/Aviation
Including System Engineers, Project Engineers, and more.

Design Engineers
Including Technical Design Drafters and related.

Mechanical Engineers
Openings vary by state and need.

Electrical Engineers
All levels of expertise needed. Pay rates standard for industry.

Information Technology
Careers as Desktop Analyst, Project Manager, Technical Writer and more.

Biochemistry
Including, but not limited to: Senior Chemist, Lab Tech-Chemist, Chemist and Associate Chemist.

All positions vary by state, client and need. All resumes are accepted for future reference unless otherwise stated.

DON'T SEE WHAT YOU'RE LOOKING FOR?

We have a lot more positions available online. Our website is updated on a daily basis, including weekends. *Check out the most up-to-date openings at:*

www.nesc.com or call 800-562-3463

Belcan is a global supplier of engineering, supply chain, technical recruiting, and IT services to customers in the aerospace, defense, automotive, industrial, and government sectors. From jet engines, airframe, and avionics to heavy vehicles, chemical processing, cyber security, and consulting services, Belcan will help you find your next career.

HOT JOBS

Seattle, WA – HOT!
Aviation Technician
Gas Turbine Instrumentation
lhead@belcan.com

Pittsburgh, PA
Mechanical Designer
Automation/Robotics & Inventor
bcampbell@belcan.com

Raleigh, NC
Manufacturing Engineer
Develop test plans and equipment
kcherry@belcan.com

Mojave, CA
Structural Design Engineer
Configuration Mgmt, CATIA v5
bsparks@belcan.com

Hooksett, NH
Manufacturing Engineer
T901 NPI Hardware Support
lhead@belcan.com

Stratford, CT
MRB Engineer
CATIA V5. Airframes/Structures, Static Stress
radebiase@belcan.com

Belcan Job Opportunities:
Automation Controls Engineers | Mechanical Engineers & Designers | Electrical Engineers & Designers | Structural Engineers & Designers | FEA Design Analysis
Manufacturing Engineers | Software Engineers | Systems Engineers | Quality Engineers | Supply Chain | Program and Project Management

Engineering Better Outcomes belcan.com/employment

CONTRACTS AWARDED

Lockheed Martin Corp., Owego, New York, is being awarded a $208,113,847 contract modification. This modification adds scope to provide non-recurring engineering for Phase II design and development of unique hardware and software for the government of India in support of the MH-60R development program. Work will be performed in Owego, New York, and Stratford, Connecticut. The Naval Air Systems Command, Patuxent River, Maryland, is the contracting activity.

Lockheed Martin Missiles and Fire Control, Orlando, Florida, was awarded a $101,332,412 contract modification for procurement of Hellfire missiles and containers. Work will be performed in Orlando, Florida. U.S. Army Contracting Command, Redstone Arsenal, Alabama, is the contracting activity.

Lockheed Martin Corp., Lockheed Martin Aeronautics Co., Fort Worth, Texas, is being awarded a $2,014,074,283 contract. This contract provides logistics support to include ground maintenance activities, action request resolution, depot activities, automatic logistics information system operations and maintenance, reliability and maintainability, supply chain management, pilot training, maintainer training, and training system sustainment in support of delivered F-35 Lightning II Joint Strike Fighter air systems for the Navy, Marine Corps, Air Force, foreign military sales customers, and non-U.S. Department of Defense participants. Work will be performed in Fort Worth, Texas; Orlando, Florida; Greenville, South Carolina; El Segundo, California; and Samlesbury, United Kingdom. The Naval Air Systems Command, Patuxent River, Maryland, is the contracting activity.

Lockheed Martin Aeronautics Co., Fort Worth, Texas, is being awarded a $411,810,561 contract. This contract procures initial spares to include global spares packages, base spares packages, deployment spares packages, and afloat spares packages in support of F-35 Lightning II Joint Strike Fighter air vehicle delivery schedules for the Navy Marine Corps, Air Force, non-U.S. Department of Defense participants, and foreign military sales customers. Work will be performed in Fort Worth, Texas. The Naval Air Systems Command, Patuxent River, Maryland, is the contracting activity.

Gray Analytics, Huntsville, Alabama, is being awarded a maximum amount $56,869,595 contract. Under this new contract, the contractor will support the Missile Defense Agency's Innovation, Science, and Technology Kill Vehicle Hardware-in-the-Loop (KV HWIL) program. The KV HWIL effort will span the spectrum of tasking required to plan, define, design, integrate, test, assess, and verify new and innovative approaches to expand HWIL capabilities enabling MDA to evaluate promising concept solutions required to defeat the advancing threat. The Missile Defense Agency, Redstone Arsenal, Alabama, is the contracting activity.

The Boeing Co., St. Louis, Missouri, has been awarded a $79,100,000 contract for B61-12 Tail Kit Assembly (TKA) surveillance and sustainment support. This contract provides the government with engineering services and technical expertise as needed across various disciplines for B61-12 TKA support. Work will be performed in St. Louis, Missouri. Air Force Nuclear Weapons Center, Kirtland Air Force Base, New Mexico, is the contracting activity.

* **See page** column refers to the page number of a display ad with possible further information regarding the job openings and/or related requirements. Where *Index* is used, there is no display ad for that listing. The address and phone number of the firm with that job can, therefore, be found in the *Index of Contract Firms* in the back of each *C.E. Weekly.* The following feature of *C.E. Weekly* categorizes job openings by discipline. Please keep in mind that *JobLines* represent just a portion of the total number of openings published in this issue. There are many jobs appearing in display ads, which do not appear in *JobLines*.

$$$$ JobLines $$$$

DOMESTIC ASSIGNMENTS:

Job Classification, Description	Assignment Location	Contract Firm/ Office to Contact	Rate	Per Diem	Over-time?	Expected Duration	Expected Start Date	* See Page
Advanced Software Engineer—network switch	Phoenix, AZ	Real Time Consult/Phoenix	open	no	—	10 mos+	ASAP	Index
Aerodynamics Engineer	Berkeley, MO	American Cybersys/Bellevue	—	—	—	12 mos	ASAP	Index
Aeronautical Engineer—C/C++/Fortran	Fort Worth, TX	Indotronix/Rochester	95	split	—	12 mos	ASAP	Index
Aeronautical Engineer—CATIA V4-V5/airframe/MRB	Palmdale, CA	PDS/Westlake Village	—	—	—	14 mos	—	Index
Aeronautical Engineer—Thermodynamics team/secret	Fort Worth, TX	Indotronix/Rochester	95	split	—	12 mos	ASAP	Index
Aeronautical Engineer—heat transfer/active secret	Fort Worth, TX	Indotronix/Rochester	95/hr	split	—	12 mos	ASAP	Index
Aircraft Electrical Interiors Engineer—Mentor Graphics	Savannah, GA	Adv Technology/Wrentham	60-65/hr	poss	poss	4 yrs	2-3 wks	7
Airframe Design Engineer—BS/5+ yrs exp/NX/Part 23	Palo Alto, CA	Belcan/Cincinnati	—	—	—	—	—	Index
Analyst/Developer 3—Python/Ciena Blue Planet exp	Allen, TX	PDS/St Louis	—	—	—	6 mos	—	Index
Architect	Seattle, WA	Keltia Design/Everett	DOE	no	no	direct	ASAP	Index
Assembler	Stennis Space Ctr, MS	Moseley/Huntsville	open	—	—	—	—	Index
Associate Project Manager—QA/4+ yrs biotech exp	Pleasanton, CA	Chipton Ross/Playa Del Rey	70-80/hr	—	—	6 mos	—	Back
Avionics Creo Cable and Harness Design Engineers	USA	Adv Technology/Wrentham	60-80/hr	poss	poss	6-12 mos	2-3 wks	7
Avionics Systems Engineers—40 openings	WA	Beacon Hill Staff/Boston	50-70/hr	yes	poss	12 mos+	ASAP	Index
Avionics Technician—wire harness install	Greenville, SC	Indotronix/Rochester	35/hr	split	—	12 mos	ASAP	Index
CMM Programmer/Operator—QA/CMM	N. Charleston, SC	Iconma/Davenport	—	split	poss	3 mos	11/29/21	6
CNC Operator-Programmer—5-axis/US citizen	Orlando, FL	Visium/Maitland	open	—	poss	contr-dir	ASAP	7
CNC Programmer—Esprit CAM/SWISS lathe/machining	Euclid, OH	Butler Aero/Shelton	DOE	no	poss	12 mos	ASAP	3
Circuit Design Engineer—mixed-signal/simulation/PSpice	Chandler, AZ	TalentPro/Fairfield	60/hr	yes	yes	12 mos	ASAP	Index
Completions Electrical Engineer	Savannah, GA	Precision Pers/Clearwater	60-65/hr	yes	poss	1 yrs+	ASAP	Index
Contract Admin Specialist—Adobe/MS Excel/proposals	Hazelwood, MO	Structures Co/Seal Beach	35/hr	split	poss	9 mos	ASAP	Index
Database Engineer—SAP HANA exp/Agile/BS/ETL tools	TX	Chipton Ross/Playa Del Rey	45-55	—	—	12 mos	—	Back
Design Engineer—Aircraft nacelle design/CATA V5/2D/3D	Baltimore, MD	Hi-Tek Prof/Media	65-75/hr	poss	poss	6 mos+	ASAP	Index
Design Engineer—CATIA V5/automotive/components	Marysville, OH	Adv Technology/Wrentham	40-48/hr	poss	poss	2-3 yrs	2-3 wks	7
Design Engineer—Inventory/create documentation pkgs	Huntington Bch, CA	Chipton Ross/Playa Del Rey	DOE	—	—	3 mos+	—	Back
Design Engineers—CATIA V4 or V5/read engineering drwgs	Fort Worth, TX	Johnson/Bedford	—	—	—	—	—	5
Designer II—SolidWorks/Creo/NX/CATIA/ASME/GD&T/Y14.5	Broomfield, CO	Belcan/Cincinnati	—	—	—	—	—	Index
Electrical (Low voltage) Designer with AutoCAD skills		Keltia Design/Everett	—	—	—	—	—	Index
Electrical Applications Engineer	Savannah, GA	Precision Pers/Clearwater	58-62/hr	yes	yes	1 yrs+	ASAP	Index
Electrical Designer—AutoCAD/low voltage	WA	Keltia Design/Everett	DOE	no	no	LT	ASAP	Index
Electrical Designer—AutoCAD/low-med voltage power dist	Lakeland, FL	Visium/Maitland	open	—	poss	contr-dir	ASAP	7
Electrical Engineer—BSEE/electric power generation	Salem, VA	Belcan/Cincinnati	—	—	—	—	—	Index
Electrical Engineer—RF-microwave circuits/US citizen	Phoenix, AZ	Real Time Consult/Phoenix	open	no	StTm/OT	6 mos+	ASAP	Index
Electrical Harness Installation Engineer—EWIS	Savannah, GA	Adv Technology/Wrentham	70/hr	poss	poss	4 yrs	2-3 wks	7
Electromechanical Equipment Technician	Piscataway, NJ	Visium/Maitland	open	poss	poss	6 mos+	ASAP	7
Electromechanical Technician—assy/disassembly/test	Buford, GA	Visium/Maitland	—	—	poss	contr-dir	ASAP	7
Electronic Repair Technician—assy/disassembly/DC-AC	Estacada, OR	Visium/Maitland	open	poss	poss	contr-dir	ASAP	7
Electronic Repair Technician—solid state/audio signals	Estacada, OR	Visium/Maitland	open	poss	poss	3mos-dir	ASAP	7
Electronic Repair Technician—troubleshoot-repair	Orlando, FL	Visium/Maitland	open	—	poss	contr-dir	ASAP	7
Electronic Technician—DC-AC/solid state theory	Orlando, FL	Visium/Maitland	open	—	poss	contr-dir	ASAP	7
Electronic Technician—repair/troubleshoot	Orlando, FL	Visium/Maitland	open	—	poss	contr-dir	ASAP	7
Electronics Repair Technician—maintenance/test/repairs	Piscataway, NJ	Visium/Maitland	open	yes	poss	6 mos+	ASAP	7
Embedded Software Engineer—Secret/JASSM/C++ 11/Ada 95	Orlando, FL	PDS/St Louis	—	—	—	12 mos	—	Index
Engineer—digital/RTL/VHDL/Verilog/code HDL/US citizen	Manhattan Bch, CA	TalentPro/Fairfield	80-100hr	yes	yes	12 mos	ASAP	Index
Engineer—electronic eqpt-systems/test/power supplies	Baltimore, MD	TalentPro/Fairfield	open	yes	yes	12 mos	ASAP	Index
Engineering Checker—CATIA V5/SmarTeam	Savannah, GA	CTS/Issaquah	—	—	—	12 mos	ASAP	5
Environmental Engineer	Indianapolis, IN	Alliance/Indianapolis	—	poss	poss	6 mos+	ASAP	Index
FPGA Designer—DO-254/DOORS/avionics hardware/DOORS	Texas	Butler Aero/Shelton	—	—	—	—	—	3

JOBLINES *– Continued on Page A-3*

THIS WEEK'S DISPLAY ADVERTISERS:

Additional Contract Services 7
Advanced Technology 7
Belcan A-1
Butler 3
Chipton-Ross . . . . . .Back
CTS International 5
Global Contract Professionals 6
Iconma 6
Johnson 5
Mokavia 4
NESC Staffing . . . . . .Front, 2
PDS 5
Visium 7

NOW HIRING!

Aircraft Engineering & Design

New Jersey

Mechanical Engineer (61788) – Will design and develop new actuation systems from concept to detailed design. 5 years of engineering design experience working in aerospace, defense or an equivalent. Requires experience working with ANSI 14.5 geometric tolerance. Proficiency with PTC Creo or SolidWorks

Electrical Engineer (61787) - Will be responsible for creating digital and analog electrical designs for aerospace actuation systems. Looking for a background in DSP, power conversion, FPGA or motor invertors. Should also be familiar with DOORS and have software/firmware design and implementation experience.

Texas

FPGA Designer (61193) – Complex logic, FPGA, design engineer familiar with the DO-254 design process for avionics hardware. Will design lifecycle of an FPGA in the Microsemi product families. Must be skilled in the use of VHDL design tools and familiar with DOORS. Experience with testing and integration of the FPGA into a circuit is preferred

- ***US Citizenship or Permanent Resident Required*** •
- *Paid Holidays* • *Dental*
- *BC/BS Medical Insurance*
- *Vision* • *Direct Deposit*

Send resumes to:
Jerry Rothchild
Email: jrothchild@butler.com
Direct Dial: 203/926-2705

BUTLER AEROSPACE & DEFENSE
An HCL Technologies Company

www.butler.com

Butler Aerospace and Defense provides industry-leading outsourced engineering, technology, telecom and fleet maintenance services to premier companies in the aerospace, federal defense, manufacturing, commercial, and communications industries.

For more information, please visit www.butler.com. **EOE/AA/M/F/D/V**

NOW HIRING!

Aerospace Engineering & Design

Georgia

Aerospace Systems Design Engineer (62091) – Responsible for defining requirements for design and qualification of aircraft fuel or hydraulic systems including actuation components. Active secret clearance required.

Remote

Systems Engineer & Requirements Management (62597) – Requirements development and management of aircraft design subsystems and components. Exp system design from conceptual design to test and initial production with product testing and DOORS required.

Indiana & Ohio

CNC Programmers – Looking for experienced CNC Programmers for multiple clients.

- ***US Citizenship or Permanent Resident Required*** •
- *Paid Holidays* • *Dental*
- *BC/BS Medical Insurance*
- *Vision* • *Direct Deposit*

Send resumes to:
Laura Leszek
Email: lleszek@butler.com
Direct Dial: 765-412-3240

BUTLER AEROSPACE & DEFENSE
An HCL Technologies Company

www.butler.com

Butler Aerospace and Defense provides industry-leading outsourced engineering, technology, telecom and fleet maintenance services to premier companies in the aerospace, federal defense, manufacturing, commercial, and communications industries.

For more information, please visit www.butler.com. **EOE/AA/M/F/D/V**

MOKAVIA AEROSPACE

Committed to Engineering Excellence

Aerospace Engineering Contract Staffing
FAA Certification and Engineering Services
Aftermarket Parts Engineering and Certification

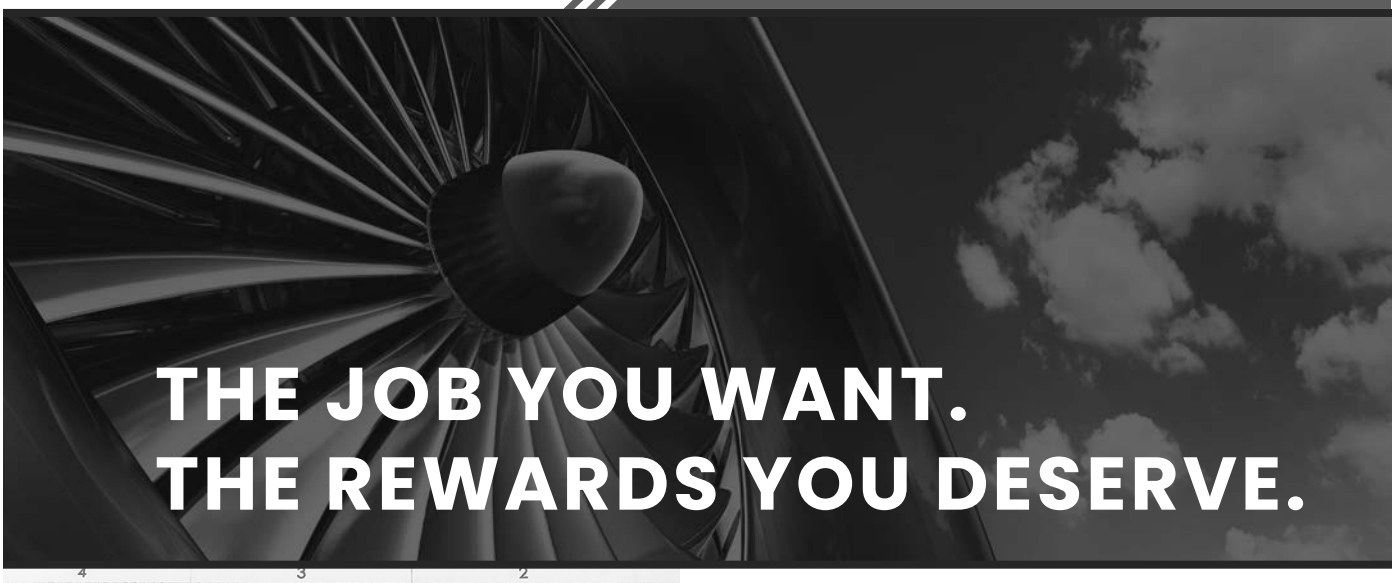

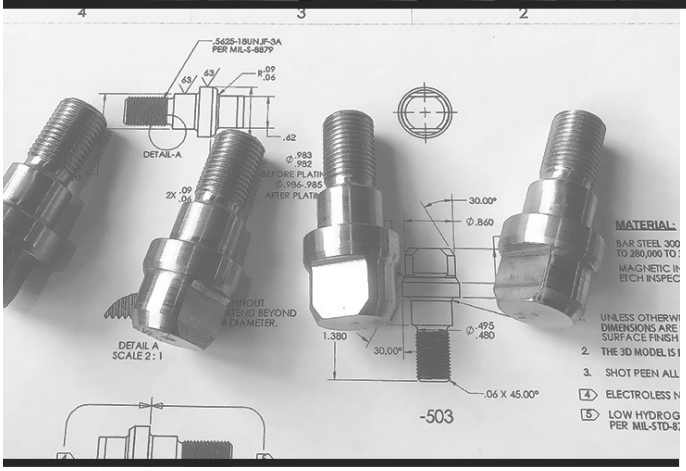

Don't get just another engineering job—join a collaborative, supportive team with a culture that truly values your contributions.

If you have 8+ years of engineering experience, Mokavia Aerospace has immediate nationwide opportunities for you, including work-from-home positions!

CURRENT OPENINGS

- Stress/Structural Analysis Engineers*
- Design Engineers*
- Tech Designers
- Product Review + MRB/Liaison Engineers*
- * B.S. degree required

EMPLOYEE REWARDS

- Paid time off
- 6 annual holidays
- Healthcare benefits
- 401(k) plan
- Per-diem available

APPLY TODAY

We pay referral bonuses, too!

Contact Sean Cummings at 425-780-4422
or sean.cummings@mokaviaaero.com

www.mokaviaaero.com

CTS INTERNATIONAL

Grow your aerospace career with CTS International. Great Opportunities for all skill levels available now!

CTS offers exceptional career opportunities and **benefits** including **Paid Holidays, Bonuses, Direct deposit, Medical coverage, 401(k) and Referral bonus**

JOB OPPORTUNITIES

Structural Design Engineers
Liaison MRB Engineers
Real Time Software Engineers
Electrical Design Engineers
Tool Designers/Engineers
Test & Evaluation Engineers
Stress Engineers
Wire Design Engineers
Systems Engineers
EE Technical Designers
NC Programmers
MP&P Engineers
Technical Designers (Mechanical/Structural)
Electronics Systems Design Engineers
Interior Mechanical Design Engineers
Manufacturing Planners/Engineers
Mechanical Systems Design Engineers

For immediate consideration, please apply online at **https://www.ctsinternational.com/jobs.aspx** or email your resume directly to cjhunter@ctsinternational.com
Contact Us : info@ctsinternational.com 1-877.878.2992

EARN. CONNECT. GROW.

Use a JSG assignment to try out a new job, address short-term employment constraints, or become a candidate for a full-time position all while receiving fair compensation for the work you perform. Beyond the pay you receive, working for JSG can help you avoid gaps in your work history, build valuable business contacts, and gain new or additional work experience.

SIA STAFFING RECOGNITIONS:

- Largest Staffing Firms (US)
- Fastest Growing Staffing Firms (US)
- Largest Engineering Staffing Firms (US)

JSG OFFICES:

Atlanta, GA - (800) 841-0927
Armonk, NY - (914) 940-2750
Birmingham, AL - (800) 569-3555
Charleston, SC - (800) 215-3555
Chicago, IL - (800) 323-4987
Dallas, TX - (800) 784-6545
Irvine, CA - (877) 241-4124
Jacksonville, FL - (877) 601-9193
Knoxville, TN - (800) 574-8324
Los Angeles, CA - (866) 993-2440
Mobile, AL - (800) 784-6529
Oklahoma - (800) 633-6594
Philadelphia, PA - (877) 239-2877
San Jose, CA - (866) 656-0539
St. Louis, MO - (866) 296-3068

JSG JOB OPPORTUNITIES:

Aerospace Engineers | Architects | Chemical Engineers | Civil Engineers & Designers | Network Engineers | Control Engineers | UI Developers | Electrical Engineers & Designers | Software Engineers | I&C Engineers | Industrial Engineers | Systems Engineers/Technicians | Web Developers | Manufacturing Engineers | Mechanical Engineers & Designers | Project Managers & Engineers | Piping Designers | Safety Engineers | Information Security | Stress Engineers | Structural Engineers | Application Developers

JSG JOHNSON SERVICE GROUP
People. Reach. Hire®
www.jsginc.com

PDS Tech
An AKKA Group company

Connecting the *Right People* to the *Right Jobs*

www.pdstech.com
(800) 270-4737

Long-term and short-term positions available in multiple industries across the US! Visit www.pdstech.com to search our current offerings and send your resumes.

Vehicle Driver (CA)
Exp driving prototype or pre-production vehicles
Contact: mcuellar@pdstech.com

Data/Test Automotive Technician (CA)
Exp collecting data on autonomous features (regular vehicles)
Contact: mcuellar@pdstech.com

Manufacturing Engineer (MO)
Must have active secret clearance
Contact: gsanchez@pdstech.com

RF Engineer (AL)
PCB design, Mentor Graphics, MATLAB, radar, signal processors, 10+ yrs exp
Contact lcontreras@pdstech.com

Embedded Software Engineer with Secret Clearance (CA, TX, FL)
C++ 11 or higher, real-time, full life-cycle development, Linux
Contact: nemfinger@pdsdefense.com

Sr. Software Engineer Data Platform - Back End (Remote)
Computer science, programming languages (Java/Python), cloud technology, data processing
Contact: ppham@pdstech.com

Avionics and Electrical Systems Engineer (KS)
Perform advanced electrical and avionics design and integration analysis. Test plans, functional tests, Mentor Graphics, requires BSEE
Contact: ringle@pdstech.com

Sr. Tooling Design Engineer (MO)
Assembly and composites exp, CATIA V5
Contact: gsanchez@pdsdefense.com

Paperless Hiring | Paperless Weekly Pay | Direct Deposit
Customizable Benefits | Identity Theft Protection
401K Immediate Enrollment

National Recruiting | San Antonio, TX | Dallas Technical Services
Charleston, SC | Tampa, FL | Savannah, GA | Atlanta, GA | Seattle, WA
Westlake Village, CA | St. Louis, MO | Santa Ana, CA | Wichita, KS

TEAMGLOBAL™

SOUTH CAROLINA — Project Planner – Generate operatives or network orders for production operations, process and maintain production change requests, maintain drawing cabinet.

CALIFORNIA

Aeronautical Engineer – Development, test, and validation of aircraft structural designs. Must have CATIA V4 or V5, 3D models, airframe structure design, MRB Material Review Board, liaison support experience.

Avionics Engineer – Experience with any of these systems: communication, navigation, identification, radar, RF, electronic warfare, electro-optical, mission computer processors.

Structural Analysis Stress/DADT/Dynamics/FEA/FEM – Min of 9 years of experience in aircraft aeroelasticity and/or aeroservoelasticity for a combination of 9 years between the two.

SOUTH CAROLINA

Training & Development – 5+ yrs experience in instructional design or development. Proven experience working with Articulate Storyline, and/or Camtasia (or similar).

TEXAS

Aeronautical Engineer – Strong structural and systems stress analysis experience. Experience with metallics, composites and finite element tools.

Check out our Benefits: Medical/Dental/Vision - Matching 401K - TG Rewards and more...
Contact our Engineering Recruiter to learn more about the positions above and many more!
Email your resume to: gcpjobs@teamglobal.com

817.234.9553
www.teamglobal.com

iconma

Expertise You Can Trust

www.iconma.com

Manufacturing Engineer Positions – Mesa, AZ – St. Louis, MO – New Orleans, LA – Ridley Park, PA – North Charleston, SC. Must have 5+ yrs exp in assembly and installation, fabrication and electrical. Bachelor, Master or Doctor of Science degree from an accredited course of study, in engineering, computer science, mathematics, physics or chemistry is required

Manufacturing Planner (Electrical) – Mesa, AZ – Everett & Renton, WA

Structural and Payload Design Engineers – Oklahoma City, OK (CATIA) – Titusville, FL (Creo or NX)

Product Review Engineer – N. Charleston, SC. Engineer degree and MRB certification required. Client commercial airplanes and Material Review Board (MRB) credentials required

Tool Engineer – N. Charleston, SC. Engineer degree required & CATIA.

Test & Evaluation Engineer and Test & Evaluation Lab Technician – Seattle, WA – Tukwila, WA. Provides assistance to plan product testing, test support requirements and acquire equipment, test materials, fixtures, articles and vehicles. Maintains test documentation that supports regulatory requirements.

Take your Career to the Next Level with the Help of Our Staffing Specialists!

- Nationwide Opportunities
- Competitive Compensation
- Great Benefits
- Referral Bonus

As an equal opportunity employer, ICONMA prides itself on creating an employment environment that supports and encourages the abilities of all persons regardless of race, color, gender, age, sexual orientation, citizenship, or disability.

Call for current openings
Multiple national openings for many engineering disciplines!

Connie Whitcomb, Sr. Recruiter
(855) 609-1059 or (312) 502-4795
constance@iconma.com

SPI

SYSTEM PROS
ADDITIONAL CONTRACT SERVICES
NATIONAL DIVISION
www.acsnatl.com
www.syspros.com

HOT CONTRACT NEEDS THROUGHOUT THE COUNTRY

Immediate Needs - Email a resume to our National Recruiters: acs@acsnatl.com and call our recruiters at 800-661-8272

MANUFACTURING, QUALITY, INDUSTRIAL ENGINEERS - All industries (Nationwide)

RELIABILITY/SAFETY ENGINEERS - All industries (Nationwide)

STRESS AND STRUCTURAL ANALYSIS ENGINEERS - NASTRAN, PATRAN, ANSYS, FEMAP (Nationwide)

NC PROGRAMMERS - 5 axis (Nationwide)

MACHINE DESIGN AND AUTOMATION DESIGNERS - (Nationwide)

AVIONICS AND ELECTRICAL DESIGN ENGINEERS - Aircraft electrical and avionics upgrades (Nationwide)

CAD DESIGNERS - Mechanical or electrical designs using Autodesk Inventor, Creo, NX, SolidWorks, CATIA (Nationwide)

PROJECT ENGINEERS AND PROGRAM MANAGERS - All industries (Nationwide)

85 Rangeway Road, Bldg 1, Suite 2 • North Billerica, MA 01862
800/661-8272 • 24 Hr Fax: 800/661-4055

URGENT TECHNICIAN NEEDS IN NEW JERSEY
Visium Resources has immediate opportunities for Electronic and Solder technicians in New Jersey. Aerospace and/or Military experience strongly preferred.
Component level repair and soldering experience to FAA specifications.
Per Diem and travel offered.

Power Generation Jobs in Orlando
Immediate needs for Mechanical and Electrical Engineers, preferably with turbine generator experience.

Visium Resources is an award-winning employment firm with a mission to match talented individuals with highly successful organizations.

At Visium, our company's success is based on your success. When you work with us, you are never "just a number". You are our most important asset.

Call Mike Forster at 321-397-1016 or visit us at www.visiumresources.com

ADVANCED TECHNOLOGY
INNOVATION CORPORATION™

PHONE: 877-334-7700
FAX: 877-335-7700

Updated List of Positions Open

Aircraft
Send resume to jpelosi@advancedtechno.com
- ECS, Propulsion, Landing Gear (MA, PA, AZ, GA, KS)
- FEA Analyst - ANSYS or NASTRAN (ND, Montreal, VA, CA)

Mechanical Engineers
Send resume to apelosi@advancedtechno.com
- Mechanical Engineers - Consumer exp (South, Southwest)
- Mechanical Engineers - 3D CAD, FEA a plus (Midwest, Southeast)

Manufacturing Engineers
Send resume to mcalisi@advancedtechno.com
- Mfg/Quality Engineers - Castings, weldments, stampings (Midwest)
- Manufacturing Engineer - Aircraft exp, CATIA V5 (Midwest)

Electrical Engineers
Send resume to jmac@advancedtechno.com
- Electronic Design - Analog/digital (MI, AZ, VA, CT, IN, TN)
- Logic/Firmware Design - FPGA, VHDL (AZ, CA, NY, VA, TX)

Electrical Engineers
Send resume to chrisl@advancedtechno.com
- Avionics - EE, IFE, EWIS, Biz jets a plus (FL, GA, KS, MO, DE)
- Wire Harness Routing - Vehicles a plus (MI, MN, OH, CA)

Information Technology
Send resume to kpotter@advancedtechno.com
- PLM Administrator - Windchill or TC ($55-90 DOE)
- Windchill Developers and Architects (Open Rate)

Embedded SWE's
Send resume to annmarie@advancedtechno.com
- Embedded Systems Developers - Rate open (MW, SW, SE, NE, SE)
- OS Internals Developers (TX, FL, CA, AZ, NY)

Avionics Software Developers
Send resume to davellino@advancedtechno.com
- Flight Sim - C++, Linux (CA, AZ, DC, NJ, TX)
- Ada Fortran Flight Controls (MI, FL, CA, TX)

UG NX Designers
Send resume to gcurtis@advancedtechno.com
- NX Designers - Structures (CA, AZ, VA, CT)
- NX Design Engineers - E/M Packaging, thermal a plus (DC, CA, MA)

CATIA
Send resume to plundie@advancedtechno.com
- Designers - Automotive, chassis/suspension or B&W
- Design Engineers - Seating or interior trim

Pro/E
Send resume to sclark@advancedtechno.com
- Product Design - Plastics, surfaces a plus (TX, NC, MN, MO)
- Sheet Metal, Weldments, Creo

CHECK OUT OUR WEBSITE AT: WWW.ADVANCEDTECHNO.COM

INDEX OF CONTRACT STAFFING FIRMS

NEW & ONE-TIME ADVERTISERS:
These firms may have job requirements elsewhere in this issue

Agreeya Solutions
605 Coolidge Drive, Suite 200
Folsom, CA 95610
916/294-0075
www.agreeya.com
jobs@agreeya.com

Mokavia Aerospace, LLC
(please see our display ad)
22722 29th Drive SE, Suite 100
Bothell, WA 98021
425/780-4422
www.mokaviaaero.com
sean.cummings@mokaviaaero.com

REGULAR INDEX ADVERTISERS

804 Technology
5381 Highway N, Suite 201
Cottleville, MO 63304
636/928-0330
FAX 636/530-3693
www.804technology.com
dgant@804technology.com

Acro Service Corporation
39209 6 Mile Road, Suite 250
Livonia, MI 48152
734/591-1100, 800/844-ACRO
FAX 734/591-1217
www.acrocorp.com
dgaspard@acrocorp.com

Additional Contract Services
(please see our display ad)
85 Rangeway Road, Building 1, Suite 2
North Billerica, MA 01862
800/661-8272
FAX 800/661-4055
acs@acsnatl.com

Additional Technical Support, Inc. (ATSI)
24A Norfolk Avenue
South Easton, MA 02375
877/871-0785
john.caliri@nerjobs.com

Advanced Technology
(please see our display ad)
15 Kenneth Miner Drive
Wrentham, MA 02093
877/334-7700
FAX 877/335-7700
www.advancedtechno.com
tbonanno@advancedtechno.com

Advantage Technical Resourcing, Inc.
P.O. Box 9130
Norwood, MA 02062
781/251-8100, 800/225-8956
www.hirethinking.com
northeastregion@advantageresourcing.com

Advantage Technical Resourcing, Inc.
2001 Gateway Place
San Jose, CA 95110
877/912-5720
www.hirethinking.com
northwestregion2@advantageresourcing.com

Agente Technical
714 Centerpark Drive, Suite 140
Colleyville, TX 76034-2852
866/758-2494
FAX 866/717-5927
www.agentetech.com
resumes@agentetech.com

Alliance Group Technologies Co.
911 Broad Ripple Avenue, Suite B
Indianapolis, IN 46220
317/954-8179
www.alliancegrouptech.com
mweir@alliancegrouptech.com

Allstates Consulting Services
16200 Addison Road, Suite 250
Addison, TX 75001
214/736-7165
www.allstatesconsulting.net
ken.osvath@allstatesconsulting.net

American CyberSystems
1750 112th Avenue NE, Suite C228
Bellevue, WA 98004
425/605-2321
www.comforce.com
janice.plattner@acsicorp.com

Apollo Professional Solutions
7310 Ritchie Hwy, Suite 400
Glen Burnie, MD 21061
866/277-3343
www.apollopros.com
jpyle@apollopros.com

Apollo Professional Solutions
4010 Watson Plaza Drive, Suite 138
Lakewood, CA 90712
866/277-3343
www.apollopros.com
tmartinez@apollopros.com

Apollo Professional Solutions
1857 Wells Road, Suite 216
Orange Park, FL 32073
904/562-3214, 866/277-3343
www.apollopros.com
rmeserve@apollopros.com

Apollo Professional Solutions
2646 Highway 109, Suite 207
Wildwood, MO 63040
626/438-0312, 866/277-3343
www.apollopros.com
gdarcangelis@apollopros.com

Apollo Professional Solutions
42 Main Street
Windsor Locks, CT 06096
860/254-6335, 866/277-3343
www.apollopros.com
rbreisler@apollopros.com

Beacon Hill Staffing Group
152 Bowdoin Street
Boston, MA 02108
www.beaconhillstaffing.com
bmcinnis@beaconhillstaffing.com

Belcan TechServices
(please see our display ad)
Corporate Headquarters
7820 Redsky Drive
Cincinnati, OH 45249
513/432-2995
800/945-1900
www.belcan.com
mwick@belcan.com

Bentley Global Resources LLC
3937 Tampa Road, Suite 3
Oldsmar, FL 34677
813/510-3032
www.bentleygr.com
christion@bentleygr.com

Black Diamond Networks
23 Main Street
Andover, MA 01810
978/474-9980
800/681-4734
FAX 978/470-0225
www.blackdiamondnet.com
dsheehan@blackdiamondnet.com

Butler Aerospace & Defense
(please see our display ad)
Shelton Pointe, Suite 204
2 Trap Falls Road
Shelton, CT 06484
203/926-2705
FAX 203/926-0082
www.butler.com
jrothchild@butler.com

Butler Aerospace & Defense
(please see our display ad)
3495 Kent Avenue
West Lafayette, IN 47906
765/412-3240
www.butler.com
lleszek@butler.com

CadStar International Ltd.
100 Burtt Road, Suite 202
Andover, MA 01810-5915
800/562-8367
FAX 888/432-9737
www.cadstar.com
chris.sullivan@cadstar.com

Chipton Ross
(please see our display ad)
420 Culver Boulevard
Playa Del Rey, CA 90293
310/414-7800 ext 286
FAX 310/414-7808
www.chiptonross.com
cr_engineering@chiptonross.com

Colonial Staffing Group
1600 Providence Hwy
Walpole, MA 02081
781/248-4307
www.colonial-staffing.com
jhatch@colonial-staffing.com

CTS International
(please see our display ad and online banner)
160 NW Gilman Blvd, Suite 250
Issaquah, WA 98027
425/451-0051
FAX 425/635-7630
www.ctsinternational.com

Entegee Engineering Technical Group
5620 International Parkway
New Hope, MN 55428-3047
763/577-9000
FAX 763/577-9010
www.entegee.com
plymouth@entegee.com

ESG-Engineering Services Group
900 Lanidex Plaza, Suite 230
Parsippany, NJ 07054
973/334-4844, 800/258-1465 x206
FAX 800/354-1788
www.entegee.com
wayne.hill@esgjobs.com

Expleo USA, Inc.
220 West Douglas Avenue, Suite 250
Wichita, KS 67202
316/264-3778
www.expleogroup.com
taylor.fry@expleogroup.com

Global Contract Professionals
(please see our display ad)
P.O. Box 161127
Fort Worth, TX 76161-1127
817/847-6673, 877/280-2156
FAX 817/847-9444
www.teamglobal.com
gcpjobs@teamglobal.com

HEPCO, Inc.
160 Pehle Avenue, Suite 202
Saddle Brook, NJ 07663-5227
201/843-4400, 800/656-0099
FAX 201/843-0025
www.hepcoinc.com
resumes@hepcoinc.com

Hi-Tek Professionals Inc.
103 Chesley Drive, Suite 207
Media, PA 19063
610/534-8701, 877/271-1799
FAX 610/534-8697
www.hitekprofessionals.com
htp@hitekprofessionals.com

Inconen
6133 Bristol Parkway, Suite 232
Culver City, CA 90230
310/410-1931
FAX 310/410-1751
www.inconen.com
cathy@inconen.com

Iconma, LLC
(please see our display ad)
4620 East 53rd Street
Davenport, IA 52807
312/502-4795
www.iconma.com
constance@iconma.com

Iconma, LLC
197 State Route 18, Suite 205
East Brunswick, NJ 08816
www.iconma.com
prakash@iconma.com

Iconma, LLC
850 Stephenson Hwy, Suite 612
Troy, MI 48083
248/234-6123, 866/914-9724
www.iconma.com
jimmy@iconma.com

Iconma, LLC
850 Stephenson Hwy, Suite 612
Troy, MI 48083
www.iconma.com
eric@iconma.com

Indotronix International
687 Lee Road, Suite 350
Rochester, NY 14606
745/473-1137
www.iic.com
cj@iic.com

Johnson Service Group
(please see our display ad)
Corporate Headquarters
1 East Oak Hill Drive, Suite 200
Westmont, IL 60559
630/655-3500, 800/323-4987
FAX 630/655-3506
www.jsginc.com
midwestjobs@jsginc.com

Johnson Service Group
84 Business Park Drive, Suite 209
Armonk, NY 10504
914/940-2750
www.jsginc.com
jonw@jsginc.com

Johnson Service Group
1000 Parkwood Circle SE, Suite 800
Atlanta, GA 30339-6627
770/988-0005, 800/841-0927
FAX 770/988-8361
www.jsginc.com
atljobs@jsginc.com

Johnson Service Group
1600 Airport Freeway, Suite 400
Bedford, TX 76022-6871
817/545-4009
www.jsginc.com

Johnson Service Group
660 Sentry Parkway, Suite 220
Blue Bell, PA 19422
610/828-6977
877/239-2877
FAX 610/828-6979
www.jsginc.com
a.mudalel@jsginc.com

Johnson Service Group
5023 Parkway Calabasas
Calabasas, CA 91302-1421
818/876-9610
866/993-2440
www.jsginc.com
jbeckley@jsginc.com

Johnson Service Group
25604 State Highway 112
Cameron, OK 74932
918/654-3293, 800/633-6594
FAX 918/654-3288
www.jsginc.com
cprice@jsginc.com

Johnson Service Group
25 Mauchly, Suite 311
Irvine, CA 92618
949/857-1408, 877/241-4124
FAX 949/271-6436
www.jsginc.com

Johnson Service Group
103 Suburban Road, Suite D104
Knoxville, TN 37923-5581
865/539-8234, 800/574-8324
FAX 800/784-6542
www.jsginc.com
knoxville@jsginc.com

Johnson Service Group
13241 Bartram Park Boulevard, Suite 117
Jacksonville, FL 32258
877/601-9193
www.jsginc.com

Johnson Service Group
5920 Grelot Road, Suite E1
Mobile, AL 36609
251/343-0028, 800/784-6529
FAX 251/343-0128
www.jsginc.com
lmccarron@jsginc.com

Johnson Service Group
4975 Lacross Road, Suite 157
North Charleston, SC 29406
843/329-0987, 800/215-3555
FAX 843/329-0988
www.jsginc.com

Johnson Service Group
950 S Bascom Avenue, Suite 2011
San Jose, CA 95128
408/728-9510, 866/656-0639
FAX 408/271-2701
www.jsginc.com
lpeck@jsginc.com

Johnson Service Group
111 West Port Plaza Drive, Suite 600
St Louis, MO 63146
314/542-3163, 866/296-3068
FAX 314/542-3164
www.jsginc.com
bshirley@jsginc.com

Keltia Design, Inc.
2333 Sea Way Blvd, Suite 212
Everett, WA 98203
206/368-9812
www.keltia-design.com
kevin@keltia-design.com

Moseley Technical Services Inc.
7500 S Memorial Parkway, Suite 215-R
Huntsville, AL 35802
256/880-0446
FAX 256/880-0936
www.moseleytechnical.com
email: jobs@moseleytechnical.com

MWIDM, Inc.
1445 City Avenue, Suite 10B
Wynnewood, PA 19096
www.mwidm.com
lalitha.gurung@mwidm.com

NESC Staffing
(please see our display ad and online banner)
Corporate Headquarters
150 Mirona Road
Portsmouth, NH 03801
603/431-9740, 800/562-3463
FAX 603/427-0573
www.nesc.com
portsmth@natleng.com

NESC Staffing
4715 Strack Road, Suite 200
Houston, TX 77069
281/537-9103, 800/765-7499
FAX 281/537-9169
www.nesc.com
lkanatzar@nesc.com

Neteffects
500 Chesterfield Center, Suite 350
Chesterfield, MO 63017
636/489-7110
www.neteffects.com
amy@neteffects.com

Panther Group
5 Mill and Main Place, Suite 430
Maynard, MA 01754
781/790-7900, 800/776-0562
www.thepanthergrp.com
cjhunter@thepanthergrp.com

PDS Technical Services
(please see display ad)
Corporate Headquarters
P.O. Box 619820
Dallas, TX 75261-9820
214/647-9600, 800/270-4737
FAX 888/740-1212
www.pdstech.com

PDS Technical Services
50 Founders Plaza, Suite 304
East Hartford, CT 06108
860/289-2643, 866/636-4723
www.pdstech.com
northeastjobs@pdstech.com

PDS Technical Services
300 E John Carpenter Freeway, Suite 700
Irving, TX 75062
214/647-9600, 800/270-4737
FAX 214/647-9630
www.pdstech.com
cecjdallasts@pdstech.com

PDS Technical Services
1839 S Alma School Road, Suite 250
Mesa, AZ 85210
480/929-9922, 800/657-0097
www.pdstech.com
cecjphoenix@pdstech.com

PDS Technical Services
2154 N Center Street, Suite 405D
North Charleston, SC 29406
866/224-2745
www.pdstech.com
southeastjobs@pdstech.com

PDS Technical Services
Time Square 660 Building
660 SW 39th Street, Suite 215
Renton, WA 98058
206/763-2840, 800/678-8644
FAX 206/763-3283
www.pdstech.com
email: cecjseattle@pdstech.com

PDS Technical Services
1215 Fern Ridge Parkway, Suite 231
St Louis, MO 63141
314/628-9143, 800/472-3737
FAX 314/628-9485
www.pdstech.com
cecjstlouis@pdstech.com

PDS Technical Services
3922 Coconut Palm Drive, Suite 100
Tampa, FL 33601
866/224-2745
www.pdstech.com
southeastjobs@pdstech.com

PDS Technical Services
370 N Westlake Boulevard, Suite 120
Westlake Village, CA 91362
805/418-9862, 866/458-4322
FAX 805/418-9866
www.pdstech.com
cecjwestlake@pdstech.com

PDS Technical Services
11828 W Central, Suite 100
Wichita, KS 67212-5129
316/729-1800
800/333-8644
FAX 316/729-1857
www.pdstech.com
cecjwichita@pdstech.com

Precision Personnel Inc.
600 Cleveland Street, Suite 700
Clearwater, FL 33755
727/449-0600, 877/600-2333
FAX 727/449-0627
www.precisionpersonnel.com
resumes@precisionpersonnel.com

Precision Resource Company Inc.
P.O. Box 318
Sharon, MA 02067
888/431-6300
FAX 888/431-6301
www.prcnational.com
bobs@prcnational.com

Productive Data Solutions
6870 West 52nd Avenue, Suite 107
Arvada, CO 80002
303/220-7165
FAX 303/220-7425
www.pdsinc.com
mmendocha@pdsinc.com

RCM Technologies Inc
3 Enterprise Drive Suite 110
Shelton, CT 06484
203/225-5700
Fax: 203/377-6298
www.rcmt.com
harry.pember@rcmt.com

Real Time Consulting
20601 North 19th Avenue, Suite 110
Phoenix, AZ 85027
623/792-8946
www.real-time-consulting.com
rtc-talentmgmt@real-time-consulting.com

Softworld Inc.
281 Winter Street, Suite 301
Waltham, MA 02451
781/373-8456
www.softworldinc.com
rwells@softworldinc.com

SRI Technologies
1250 Bank Drive
Schaumburg, IL 60173
847/330-1222
FAX 847/330-1411
www.sritalent.com
ryann@sritalent.com

SSE, Inc.
9666 Olive, Suite 710
St. Louis, MO 63132
314/439-4728
www.sseinc.com
thomas.bahan@sseinc.com

Strom Engineering Corp.
Corporate Headquarters
10505 Wayzata Boulevard
Minnetonka, MN 55305
952/544-8644, 800/205-8732
FAX 952/544-2451
www.stromengineering.com
ksaima@stromminnesota.com

Structures Company LLC
P.O. Box 2278
Seal Beach, CA 90740
714/823-3000
www.thestructurescompany.com
chrissheets@thestructurescompany.com

STS Aerostaff Services
2000 NE Jensen Beach Blvd
Jensen Beach, FL 34957
877/707-5767
www.stsaviationgroup.com
ethan.steele@stsengineering.com

TAD PGS Inc
12062 Valley View Street, Suite 108
Garden Grove, CA 92845
657/250-1893, 800/261-3779
www.tadpgs.com
maria.gomez@adeccona.com

TalentPro Consulting
402 North B Street
Fairfield, IA 52556
641/209-3000 x201
FAX 641/209-3001
www.talentproconsulting.com
jobs@talentproconsulting.com

TASC Technical Services
P.O. Box 1315
Plaistow, NH 03865
603/382-1114, 877/304-8272
FAX 603/382-2377
www.tasctech.com
drew@tasctech.com

Tech Resources LLC
537 Warren Avenue
St Louis, MO 63130
314/862-2090
mike@techresourcesllc.com

Tech USA LLC
8334 Veterans Highway
Millersville, MD 21108
410/846-9020
FAX 410/729-4341
www.techusa.net
scrouch@techusa.net

Technology Plus
130 S Bemiston Ave Suite 500
Clayton, MO 63105-1928
314/665-2127
www.pdstech.com
cecjtechplus@pdstech.com

Trimech Services LLC
4461 Cox Road Suite 302
Glen Allen, VA 23060
804/257-9965
FAX: 804/257-7945
www.trimechservices.com
bill.ripol@trimech.com

Triple Crown Consulting
10814 Jollyville Road, Building 4, Suite 100
Austin, TX 78759
512/331-8880
FAX 512/233-5341
www.tripleco.com
dave@tripleco.com

Visium Resources
(please see our display ad)
541 S Orlando Avenue, Suite 201
Maitland, FL 32751
321/397-1016
www.myvisium.com
email: mforster@myvisium.com

Windspeed Technologies
2615 W Casino Road, Suite 4B
Everett, WA 98204
425/248-0372
FAX 800/568-0556
www.windspeedtech.com
bruce.stewart@windspeedtech.com

Xpeerant
4308 North Garfield Avenue
Loveland, CO 80538
970/282-9287
www.xpeerant.com
woody@xpeerant.com

Yoh Services
11960 Westline Industrial Drive, Suite 100
St Louis, MO 63146-3212
314/791-1565, 800/298-0666
www.jobs.yoh.com
albert.peniche@yoh.com

JOBLINES *– Continued from Page A-2*

Job Classification, Description	Assignment Location	Contract Firm/ Office to Contact	Rate	Per Diem	Over-time	Expected Duration	Expected Start Date	* See Page
FPGA/ASIC Verification Engineer—UVM/US citizen	Manhattan Bch, CA	TalentPro/Fairfield	100/hr	yes	yes	12 mos	ASAP	Index
Fatigue & Damage Tolerance Engineer—Nastran/Patran	Savannah, GA	CTS/Issaquah	—	—	—	12 mos	ASAP	5
Guidance Nav & Control Engineer—14 yrs exp	Everett, WA	Iconma/Troy	open	split	poss	12 mos	ASAP	6
Hardware Engineer Level 4—DFT/DFD/DFM/secret/6 yrs exp	Orlando, FL	Chipton Ross/Playa Del Rey	to 78/hr	—	—	9 mos	—	Back
Hardware Support Engineer	Oklahoma City, OK	American Cybersys/Bellevue	—	—	—	12 mos	ASAP	Index
Heavy Maintenance Powerplant Specialist—Aircraft	Carrolton, TX	Belcan/Cincinnati	—	—	—	—	—	Index
IT Group Leader—service delivery and integrations	Cincinnati, OH	Belcan/Cincinnati	—	—	—	—	—	Index
Installation Technician—electrical sys/wiring	Orlando, FL	Visium/Maitland	—	no	poss	contr-dir	ASAP	7
Lidar Algorithm Development Engineer—5+ yrs exp	Redmond, WA	Belcan/Cincinnati	—	—	—	—	—	Index
Manual Machinist—10+ yrs exp/interpret blueprints	Menlo Park, CA	Chipton Ross/Playa Del Rey	40-50/hr	—	—	4 mos		Back
Manufacturing Engineer II—QC/logistics/material flow	Skaneateles, NY	Chipton Ross/Playa Del Rey	50-54/hr	—	—	12 mos	—	Back
Manufacturing Engineer—aerosp/production layout	Goleta, CA	TalentPro/Fairfield	open	yes	yes	12 mos	ASAP	Index
Manufacturing Engineer—composite part/flat pattern/2D	Salt Lake City, UT	Belcan/Cincinnati	—	—	—	—	—	Index
Manufacturing Engineers—Solumina/shipside support	Savannah, GA	Adv Technology/Wrentham	55/hr	poss	poss	4 row	2 wks	7
Manufacturing Engineers—active secret clearance	Nationwide	Adv Technology/Wrentham	open	split	poss	12 mos+	2 wks	7
Manufacturing Engineers—production layout/US citizen	Goleta, CA	Adv Technology/Wrentham	60/hr	poss	poss	12 mos+	2-3 wks	7
Manufacturing Manager—material procurement/inventory	Seattle, WA	Belcan/Cincinnati	—	—	—	—	—	Index
Mass Properties Engineer—Aerospace & CATIA exp	Baltimore, MD	Hi-Tek Prof/Media	65-75/hr	poss	poss	6 mos+	ASAP	Index
Mechanical Designers—Creo/structures/degree not reqd	Renton, WA	Adv Technology/Wrentham	DOE	poss	poss	6-12 mos	2 wks	7
Mechanical Engineer—CATIA V5/aerospace/interiors	Fort Worth, TX	Adv Technology/Wrentham	65-72/hr	poss	poss	4 yrs	2-3 wks	7
Mechanical Engineer—NX/solid model/ANSI Y14.5	Sunnyvale, CA	TalentPro/Fairfield	60/hr	yes	yes	6 mos	ASAP	Index
Mechanical Engineer—actuation sys/5+yrs exp/Creo	New Jersey	Butler Aero/Shelton	—	—	—	—	—	3
Mechanical Engineer—automated production line capacity	Carlsbad, CA	Chipton Ross/Playa Del Rey	to 65/hr	—	—	6 mos	—	Back
Mechanical Engineer—equipment skids/piping-control sys	Orlando, FL	Visium/Maitland	open	no	poss	6-12 mos	ASAP	7
Mechanical Engineers—Creo/structures/degree not reqd	Renton, WA	Adv Technology/Wrentham	DOE	poss	poss	6-12 mos	2 wks	7
Mechanical Systems Design Engineer—NX/active secret	Huntsville, AL	CTS/Issaquah	—	—	—	12 mos	ASAP	5
Mechanical Systems Design and Analysis Engineer	Everett, WA	Iconma/Troy	open	split	poss	12 mos	ASAP	6
NC Engineer—machine shop/CNC programming/GD&T	Savannah, GA	CTS/Issaquah	—	—	—	12 mos	ASAP	5
NX Modeler—5 yrs exp/aircraft parts/mechanical surface	Palo Alto, CA	Belcan/Cincinnati	—	—	—	—	—	Index
Nacelle Integration Engineer—CATIA V5	Baltimore, MD	Hi-Tek Prof/Media	60-70/hr	poss	poss	6 mos+	ASAP	Index
O&R Engineer—10 yrs rotary wing mfg exp/MRB/US citizen	West Lafayette, IN	Butler Aero/Shelton	—	—	—	—	—	3
Operational Flight Program Software Engineer	Arlington, TX	PDS/St Louis	—	—	—	12 mos	—	Index
Payload Systems Design Engineer—structural/interior	Everett, WA	CTS/Issaquah	—	—	—	12 mos	ASAP	5
Planner/Scheduler	Oklahoma City, OK	Iconma/Troy	open	split	poss	12 mos	ASAP	6
Principal Engineer-Tool Designer—jigs/dies/3D CAD	Palmdale, CA	TalentPro/Fairfield	50-58/hr	yes	yes	6 mos	ASAP	Index
Process Engineer—10+ yrs GMP, pharmaceutical or food	Allentown, PA	Chipton Ross/Playa Del Rey	to 75/yr	—	—	6 mos	—	Back
Product Data Management Engineer	Hazelwood, MO	PDS/St Louis	—	—	—	—	—	Index
Product Review Engineers—MRB cert/liaison	Everett, WA	CTS/Issaquah	—	—	—	12 mos	ASAP	5
Product Specialist 4		NESC Staffing/Portsmouth	89-97/hr	—	—	—	—	2
Production Manager—2+ yrs exp/Degreed	Orlando, FL	Visium/Maitland	open	—	poss	direct	ASAP	7
Production Planner—Site safety programs/schedule	St. Louis, MO	Chipton Ross/Playa Del Rey	—	—	—	6 mos	—	Back
Project Engineer—engrg change proposals/active secret	Huntsville, AL	Visium/Maitland	open	—	poss	contr-dir	ASAP	7
Project Manager—complex assembly-integration systems	Washington	Adv Technology/Wrentham	—	—	—	—	—	7
Propulsion Engineer—lead definition reqmts	Everett, WA	Structures Co/Seal Beach	68/hr	split	yes	12 mos	ASAP	Index
Propulsion Engineer—solid rocket motor/CAD/US citizen	Elkton, MD	TalentPro/Fairfield	40-50/hr	yes	yes	9 mos	ASAP	Index
Propulsion Engineers—air vehicle/test/certification	Everett, WA	CTS/Issaquah	—	—	—	12 mos	ASAP	5
QA Automation Engineer—Waterfall/Agile/scrum/Java/SQL	Bothell, WA	Chipton Ross/Playa Del Rey	to 65/hr	—	—	3 mos	—	Back
Quality Assurance Certification Specialist II	Savannah, GA	Precision Pers/Clearwater	55/hr	yes	yes	1 yrs+	ASAP	Index
Quality Engineer—10+ yrs sheet metal exp/root cause	Rockwall, TX	Belcan/Cincinnati	—	no	no	dir	—	Index
Quality Engineer—Aerospace/defense/PPAP/APQP/FMEA	Santa Clarita, CA	Johnson/San Jose	open	no	yes	6 mos	ASAP	5
Quality Engineers—active secret clearance	Nationwide	Adv Technology/Wrentham	open	split	poss	12 mos+	2 wks	7
RF Design Engineer—RF-microwave/simulation	San Diego, CA	Chipton Ross/Playa Del Rey	60-90/hr	—	—	6 mos	—	Back
Recruiter	Littleton, CO	Indotronix/Rochester	—	35.27	—	6 mos	ASAP	Index
Reliability Engineer—RAM technical support/CATIA V5	Baltimore, MD	Hi-Tek Prof/Media	60-75/hr	poss	poss	6 mos+	ASAP	Index
Safety/Reliability Engineer—ARP4761/MIL-STD-882E/R&M	Kirkland, WA	Belcan/Cincinnati	—	—	—	—	—	Index
Scientist III—Cell biology/viral vector gene delivery	Carlsbad, CA	Chipton Ross/Playa Del Rey	38-47/hr	—	—	12 mos	—	Back
Scientist—Process validation studies/PPQ/PV studies	St. Louis, MO	Chipton Ross/Playa Del Rey	40-50/hr	—	—	12 mos	—	Back
Software Engineer 4—Agile/Windows/Linux/integration	Oklahoma City, OK	PDS/St Louis	—	—	—	12 mos	—	Index
Software Engineer 5—Agile release train/7+ yrs exp	Hazelwood, MO	Chipton Ross/Playa Del Rey	—	—	—	12 mos	—	Back
Software Engineer III—Digital twin/data simulation	FL	Chipton Ross/Playa Del Rey	to 61/hr	—	—	12 mos	—	Back
Software Engineer—DevSecOps pipeline deployments	Fort Worth, TX	Indotronix/Rochester	—	split	—	12 mos	ASAP	Index
Software Engineer—Test planning & execution/aviation	Fort Worth, TX	Indotronix/Rochester	65/hr	split	—	12 mos	ASAP	Index

Job Classification, Description	Assignment Location	Contract Firm/ Office to Contact	Rate	Per Diem	Over-time	Expected Duration	Expected Start Date	* See Page
Software Engineer—test plan/execution/active secret	Fort Worth, TX	Indotronix/Rochester	65/hr	split	—	12 mos	ASAP	Index
Software Verification Engineers—flt mgmt sys/US citizn	Phoenix, AZ	Real Time Consult/Phoenix	open	no	StTm/OT	12 mos+	ASAP	Index
Sr Avionics Software Engineer—DOORS/C/Python	Grand Rapids, MI	Belcan/Cincinnati	—	—	—	direct	—	Index
Sr C++ Developer—UML design artifacts/RTOS/5+ yrs exp	Camden, NJ	Chipton Ross/Playa Del Rey	to 130	—	—	12 mos	—	Back
Sr Controls Software Engineer—PLC/HMI/servo drives	Palmdale, CA	PDS/Westlake Village	—	—	—	6 mos	—	Index
Sr Designer—Creo/mechanical/electromech	San Jose, CA	Adv Technology/Wrentham	60/hr	poss	poss	6-12 mos	2-3 wks	7
Sr Designer—NX 19 exp reqd/GD&T/mil specs-stds	York, PA	Adv Technology/Wrentham	50/hr	poss	poss	6-12 mos	2-3 wks	7
Sr Software Engineer—RT embedded/dev/C/C++	Utah	Adv Technology/Wrentham	80-90/hr	poss	poss	12 mos+	2-3 wks	7
Sr Spec Project Engineer—10+ yrs team lead exp	Northampton, MA	Chipton Ross/Playa Del Rey	to 65/hr	—	—	8 mos	—	Back
Sr Staff Mechanical Engineer—electrical machines/aero	Simi Valley, CA	Belcan/Cincinnati	—	—	—	—	—	Index
Sr Test Equipment Engineer—NI Test Stand/Labview	Simi Valley, CA	PDS/Westlake Village	—	—	—	12 mos	—	Index
Sr. Buyer—5 yrs purchasing exp/3 yrs govmt procurement	Alpharetta, GA	Chipton Ross/Playa Del Rey	to 45/hr	—	—	12 mos		Back
Sr. Design Engineer—optical semiconductor/specs	Carrolton, TX	Belcan/Cincinnati	—	—	—	—	—	Index
Sr. Software Engineer	Huntington Bch, CA	American Cybersys/Bellevue	—	—	—	9 mos	ASAP	Index
Sr. Systems Integration Inspector—Blueprints/specs/QA	Huntsville, AL	Chipton Ross/Playa Del Rey	DOE	—	—	6 mos	—	Back
Steering Sensor Design Engineer	Carrollton, TX	Belcan/Cincinnati	—	—	—	—	—	Index
Steering Sensor Design Engineer—5 yrs exp/BSEE/BSME	Carrolton, TX	Belcan/Cincinnati	—	—	—	—	—	Index
Stress Analysis Engineer—FEM/hand calcs/airframe	Hazelwood, MO	PDS/St Louis	—	—	—	6 mos	—	Index
Stress Analyst—helicopter main and tail rotor blades	Stratford, CT	Butler Aero/Shelton	—	no	poss	15 mos	—	3
Stress Engineers—active secret clearance	Nationwide	Adv Technology/Wrentham	open	split	poss	12 mos+	2 wks	7
Structural Analysis Engineer 3—NASTRAN/PATRAN/ABAQUS	Ridley Park, PA	Chipton Ross/Playa Del Rey	—	—	—	12 mos	—	Back
Structural Analyst—6+ yrs exp/BS	Ridley Park, PA	Iconma/Davenport	—	split	poss	12 mos	ASAP	6
Structural Engineer—project mgr/oil-gas/phosphate	Lakeland, FL	Visium/Maitland	open	—	poss	contr-dir	ASAP	7
Structures MRB Engineer—liaison/RCCA	Savannah, GA	CTS/Issaquah	—	—	—	12 mos	ASAP	5
Structures Mechanic—Fracture critical damage tolerant	Greenville, SC	Indotronix/Rochester	35	split	—	12 mos	ASAP	Index
Supplier Quality Specialist—audits of supplier systems	Torrance, CA	Iconma/Troy	open	split	poss	12 mos	ASAP	6
Supply Chain Specialist—MS Excel	Hazelwood, MO	Structures Co/Seal Beach	27/hr	split	poss	8 mos	ASAP	Index
Systems Design Engineer—aerospace/fuel/active secret	Georgia	Butler Aero/W Lafayette	—	—	—	—	—	3
Systems Engineer—Aircraft nacelle systems/CATIA V5	Baltimore, MD	Hi-Tek Prof/Media	62-72/hr	poss	poss	6 mos+	ASAP	Index
Systems Engineer—Lead/avionics/LRU/reqmts/testing/dev	Alpharetta, GA	Chipton Ross/Playa Del Rey	60-75/hr	—	—	12 mos	—	Back
Systems Engineer—Requirements management/DOORS/testing	USA	Butler Aero/W Lafayette	—	—	—	—	—	3
Systems Engineer—define reqmts-interfaces/DOORS	Dulles, VA	TalentPro/Fairfield	55-65/hr	yes	yes	9 mos	ASAP	Index
Systems Engineer—develop complex life sciences tools	Pleasanton, CA	Chipton Ross/Playa Del Rey	to 40/hr	—	—	6 mos	—	Back
Systems Engineers—reqmts dev/mgmt/analysis/DOORS	Everett, WA	CTS/Issaquah	—	—	—	12 mos	ASAP	5
Systems Integration Quality Inspector	Hunstville, AL	Iconma/Troy	24/hr	split	yes	6 mos	ASAP	6
Systems Safety Engineer—BS/10yrs exp/SARs/requirements	Auburn Hills, MI	Belcan/Cincinnati	—	—	—	—	—	Index
Talent Sourcing Specialist—HR support	Waterton, CO	Indotronix/Rochester	39.33	split	—	6 mos	ASAP	Index
Tool Design Engineers—GD&T/assembly process	Everett, WA	CTS/Issaquah	—	—	—	12 mos	ASAP	5
Tool Designer—design and fabrication requirements	Palmdale, CA	Adv Technology/Wrentham	—	—	—	—	—	7
Tool Designer—soft tooling/Fibersim/NX/US citizen	Long Beach, CA	PDS/Westlake Village	—	—	—	6 mos	—	Index
Tool Designer/Engineer—5 yrs exp/CATIA/data set manip	N. Charleston, SC	Iconma/Troy	open	split	poss	12 mos	ASAP	6
Tooling Engineers—active secret clearance	Nationwide	Adv Technology/Wrentham	open	split	poss	12 mos+	2 wks	7
VHDL Design Engineer—verification/analysis/OSVVM pref	Chandler, AZ	TalentPro/Fairfield	open	yes	yes	9 mos	ASAP	Index
Validation Engineer—Quality/4-6yrs exp/pharmaceutical	Carlsbad, CA	Chipton Ross/Playa Del Rey	$50 DOE	—	—	5 mos	—	Back
Web Developer—Git/React framework/JavaScript/HTML/CSS	Troy, MI	PDS/St Louis	—	—	—	4 mos	—	Index
Wire Design & Install Engineer 3	Tukwila, WA	Moseley/Huntsville	open	—	—	12 mos	—	Index
Wire Design Engineer—WIRS/10+ yrs exp	Tukwila, WA	CTS/Issaquah	—	—	—	6 mos	ASAP	5
Wire Design Engineers—10+ yrs exp	Tukwila, WA	Iconma/Troy	open	split	poss	6 mos	ASAP	6
Wiring Installation Designer—CATIA	Everett, WA	CTS/Issaquah	—	—	—	4 mos	ASAP	5
Workday Systems Integration Specialist	Chicago, IL	PDS/St Louis	—	—	—	3 mos	—	Index
Workforce Specialist 3	Renton, WA	Moseley/Huntsville	open	—	—	6 mos	—	Index

ABBREVIATIONS AND TERMS

Anticip: Anticipated. Openings are anticipated at this time
ASAP: As soon as possible. Openings exist now
Contr-Dir: Assignment begins on contract basis and can become direct position
DOE: Depending on experience
Immed: Immediately. Openings exist now
Indef: Indefinite. Expected duration of assignment unknown; probably Long Term
LT: Long Term (expected assignment duration 6-12 months)
Negot: Rate range may have been determined, but your rate is to be negotiated
Ongoing: Client expects openings for this discipline on an ongoing basis
Open: The rate for this assignment has not yet been set
Poss: Possible (normally refers to overtime or per diem)
Prob: Probable (normally refers to overtime or per diem)
Split: Firm will split a portion of hourly rate into per diem (if you meet IRS reqmt)
ST: Short Term (expected assignment duration less than 6 months)
StTm/OT: Straight time for overtime
VLT: Very Long Term (expected assignment duration over 12 months)

Contract Employment Weekly

www.ContractJobHunter.com

Mailing Address . . . . . .P.O. Box 3006, Bothell, WA 98041-3006
Overnight Deliveries . . . . . .22722 29th Drive SE, Suite 100, Bothell, WA 98021
Phone: . . . . . .(425) 806-5200
Email Address . . . . . .staff@cjhunter.com

Publisher & Editor: Scott Schultz • **Managing Editor:** Denise Schultz • **Staff:** Marian Martin.

Some jobs advertised in *C.E. Weekly* are for upcoming or anticipated openings, or may be filled before you respond to the advertiser. Please notify us if you find a firm advertising upcoming positions as "Immediate." ***For member online access, please contact our office for a UserID and Password.***

Contract Employment Weekly (ISSN 1063-9268) ©Copyright 2021 ContractJobHunter.com LLC. Published every Wednesday. Most job openings are for short or long term contract (temporary) assignments. There should never be a fee to apply for or accept any of the jobs published in *C.E. Weekly.* Direct (captive) positions advertised must meet the following criteria: (1) be for a position with the advertiser's client (unless it is for recruiting related staff); and (2) must be identified as "direct." If you wish to apply for any position advertised, send a copy of your current resume to the advertising firm, not to ContractJobHunter. *ContractJobHunter.com LLC* is not intended as a legal reference. Any specific problem should be referred to your attorney or accountant. All material submitted to ContractJobHunter is subject to acceptance by the publisher. Advertisers, authors and cartoonists agree to indemnify the publisher from any claims or lawsuits for libel, violation of rights, copyright infringement or other suits predicated on the content of copy submitted. No part of this publication may be reproduced or transmitted in any form by any means, electronic or mechanical, including photocopying, recording or by any information storage retrieval system, without written permission from the publisher. All returned checks subject to $5 handling fee. We reserve the right to refuse services to anyone. Services subject to change. Membership must be current to use our services. Sorry, no refunds.

Contract Employment Weekly ◆ ContractJobHunter

All print subscriptions also include online access for full duration at ContractJobHunter.com

(For Washington state add 9.5% sales tax)

Rates to U.S. addresses:

- ❑ **1 Year (with 52 print issues)** $50
- ❑ **Seniors *renewal only*** (for seniors 62+ with proof of age) . .$45
- ❑ **12 Weeks (with 12 print issues)** $30
- ❑ **Current Single Issue of *C.E. Weekly*** $4
- ❑ **1 Year Online-Access Only** $25

Rates to Canada or Mexico addresses:

- ❑ **1 Year (with 52 print issues)** $60
- ❑ **12 Weeks (with 12 print issues)** $35
- ❑ **Current Single Issue of *C.E. Weekly*** $5

Last Name _____

First Name _____ Middle Initial_____

Home Phone _____

Cell Phone _____

Address _____ Apt _____

City _____ State _____ Zip _____

Email_____

UserID AND PASSWORD FOR ONLINE ACCESS:
(Case sensitive, choose 4-14 alpha/numeric characters – no symbols)

UserID __ __ __ __ __ __ __ __ __ __ __ __ __ __

Password __ __ __ __ __ __ __ __ __ __ __ __ __ __

Payment may be made in U.S. dollars drawn on a U.S. bank, MasterCard, Visa or Amex, U.S. cash, or a Bank Draft from foreign bank. All issues are sent 1st class or airmail. We do not bill for any services or publications. We mail the current issue the same day payment is received. Consecutive issues only. No refunds. **Mail to: ContractJobHunter, P.O. Box 3006, Bothell, WA 98041.**

❑ **cash/check/money order**
❑ **MasterCard/Visa/Amex** Account # __ __ __ __ / __ __ __ __ / __ __ __ __ / __ __ __ __ Card Expires __ __ / __ __

Signature _____

DO NOT WRITE IN THIS SPACE

RELEASE INFORMATION: If someone calls ContractJobHunter and asks for me *specifically by my name*, I authorize you to release the above information to: ❑ Anyone ❑ Contract Firms Only ❑ No One* (*If you specify "No One", you will not be able to print ContractJobHunter's address/phone number on your resume)

ContractJobHunter
P.O. Box 3006
Bothell, WA 98041-3006

FIRST-CLASS MAIL

Apply online @ www.chiptonross.com • 800-927-9318

CHIPTON - ROSS
the Power of People

Putting hard-working individuals like you to work since 1983

Contact Rob Davis at
rdavis@chiptonross.com

169159 – Systems Test & Evaluation Engineer – Berkeley, MO
169114 – Scientist – basic molecular biology techniques: NGS Assays Austin, TX
169020 – EE Technical Designer3- Unigraphics NX8 – Berkeley, MO

Contact Brenda Ordaz at
bordaz@chiptonross.com

168181 – EE Technical Designer 4 – PA – Ridley Park, PA – 6 months
168379 – Engineer Electromechanical 3 – Redondo Beach, CA

Contact Kevin Suk at
ksuk@chiptonross.com

169000 – Systems Engineer 3 – El Segundo, CA
168495 – Design and Analysis Engineer 3 – Oklahoma City, OK

Contact Terry Jones at
tjones@chiptonross.com

168677 – Ground Support Design Engineer – Canoga Park, CA
167977 – Solidworks Design Checker – Hood River, OR

Many more Engineering, IT, and Manufacturing openings throughout the U.S.

BENEFITS
Holiday Pay•Vacation Pay
Weekly Pay•Direct Deposit
Delta Dental•Group Health Insurance
401(K)•Referral Bonus

Check our website www.chiptonross.com for a complete list of current openings.